3.4 A Second-Order Temperature-Compensated On-Chip R-RC Oscillator Achieving 7.93ppm/°C and 3.3pJ/Hz in -40°C to 125°C Temperature Range

Youngwoo Ji[1,2], Jiawei Liao[1], Sina Arjmandpour[1,3], Alessandro Novello[1], Jae-Yoon Sim[2], Taekwang Jang[1]

[1]ETH Zürich, Zürich, Switzerland
[2]Pohang University of Science and Technology, Pohang, Korea
[3]Sharif University of Technology, Tehran, Iran

With the development of various miniaturized IoT applications, the need for on-chip time management has been growing rapidly. An on-chip RC oscillator is one of the promising candidates since it can be fully integrated with standard CMOS technology. Typically, an RC oscillator is implemented with a comparator that periodically resets a capacitor voltage at an interval defined by a fraction of the RC time constant to generate a stable output frequency. Therefore, the RC time constant needs to be invariant to the supply voltage and temperature changes. Also, the comparator must be high power, so that its temperature-dependent delay becomes negligible compared to the RC time constant.

For the stable RC time constant, a series combination of proportional-to-absolute-temperature (PTAT) and contemporary-to-absolute-temperature (CTAT) resistors is commonly employed to cancel the first-order dependency after the 2-point trimming. However, the remaining second-order dependency deteriorates the accuracy of the output frequency. Recently, Delta-Sigma-Modulator (DSM)-based RC oscillators successfully demonstrated a single-digit temperature coefficient (TC) by employing polynomial correction [1-3] or switched resistor [4,5]. However, they require either more than 2-point trimming [2], a large energy per operation [3] or a large area [5] for operating the non-linearity correction circuits. On the other hand, sub-pJ/Hz RC oscillators using a duty-cycled comparator [6] or a low supply [7] have relatively high TCs (>100ppm/°C).

This paper proposes an R-RC oscillator scheme that achieves a low TC across a wide temperature range of -40°C to 125°C by canceling both the first- and second-order dependencies of the resistor. Also, the comparator delay does not contribute to the period of the output clock, so the output frequency can be accurately defined only by the R-RC core while using a low-power comparator. The proposed RC oscillator, implemented in a 0.18µm CMOS technology, generates a reference frequency of 2.3MHz with a temperature coefficient of 7.93ppm/°C while consuming 7.6µW with an energy efficiency of 3.3pJ/Hz.

As shown in Fig. 3.4.1 (left), the conventional RC branch consists of a first-order compensated resistor (R_1) and a capacitor (C). The period of oscillation on the node, V_{RC}, starts from GND, and it increases according to the step-response formula. Therefore, the oscillation period directly follows the R_1 value. For example, when R_1 becomes smaller at moderate temperature T_M due to its second-order dependency, it takes a shorter time to reach V_{REF} from GND. In order to mitigate this temperature dependency, the proposed R-RC configuration employs one additional first-order compensated resistor (R_2) that has a stronger second-order temperature dependency compared with R_1 (Fig. 3.4.1, right). Then, $V_{R\text{-}RC}$ starts from $(R_2/(R_1+R_2))\cdot V_{DD}$ rather than from GND. In this case, the change of the starting point of the transition cancels the effect of the reduced R_1 so that the time it takes to reach V_{REF} is independent of the temperature. For example, although R_1 becomes smaller at T_M, the time it takes to reach V_{REF} remains unchanged by the lower start point due to the further decrease of R_2. Also, the ratio between R_1 and R_2 is determined by the ratio of the second-order coefficient of the two resistors as shown in Fig. 3.4.1 (bottom right).

Normally, the R-RC branch can be implemented by using four resistors to compensate for the first- and second-order dependency of R_1 and R_2, respectively. However, it should be noted that the R-RC branch can also be implemented by using only three resistors. In this case, the first-order dependency of the slope of $V_{R\text{-}RC}$ remains, but it is compensated by that of the starting point. Only R_1 consists of two resistors with different temperature characteristics ($R_{1,PTAT}$ and $R_{1,CTAT}$), whereas R_2 is a single resistor. The resistors can be modelled as $R_1=R_{1,0}(1+\alpha_1(T-T_0)+\beta_1(T-T_0)^2)$ and $R_2=R_{2,0}(1+\alpha_2(T-T_0)+\beta_2(T-T_0)^2)$, where α and β represent first- and second-order temperature coefficients, respectively. α_2, β_1 and β_2 are determined depending on the type of the resistors. Then, for the second-order compensation, $R_{2,0}$ can be derived in accordance with $R_{1,0}$, C and the oscillation frequency (f_{osc}),

$$R_{2,0} \cong \sqrt{\frac{2\beta_1}{\alpha_2^2+2\beta_2} R_{1,0}\left(R_{1,0} - \frac{1}{f_{osc}C}\right)}.$$

Finally, since $R_{1,0}$ is composed of PTAT and CTAT resistors, α_1 can be chosen appropriately by adjusting the combination ratio of $R_{1,PTAT}$ and $R_{1,CTAT}$ to remove the first-order dependency of the reference frequency.

One of the critical aspects for operating in a wide temperature range is the implementation of the reset transistor. Figure 3.4.2 (left) shows the trade-off relationship between the reset speed and the effect of the leakage current depending on the size of the reset transistor in the conventional RC oscillators. When a small or high-V_{th} transistor is used for the reset, the oscillation period is affected by the large reset time of the weak transistor. On the other hand, when a large or low-V_{th} transistor is adopted, its off-leakage takes charges from the capacitor and alters the oscillation period. As both the off-leakage and on-resistance are highly sensitive to PVT variations, they can deteriorate the output frequency stability.

In order to overcome this trade-off relationship, the proposed R-RC circuit operates in a dual-phase by alternating two capacitors (Fig. 3.4.2, right). While one capacitor is in the RC transition mode, the other capacitor undergoes the reset operation through the parallel switches. In this way, the reset time can be as long as the RC transition time without affecting the output frequency. Therefore, the four transistors composing the proposed R-RC circuit can be very small with ultra-low leakage. Note that, despite the small size, the on-resistance of the two bottom transistors, which connect the capacitors to the ground, is sufficiently small as it receives a large V_{GS}. Also, as the capacitor voltage is in a full reset state when it changes the operation phase, the output voltage can have a sharp transition to the initial point of the R-RC transition.

In conventional RC oscillators, a continuous-time comparator is widely adopted to detect the reset timing. In this case, the undesirable comparator delay contributes to the overall period, causing non-linear temperature dependency. As shown in Fig. 3.4.3 (top, right), the output period of a conventional RC oscillator includes both the comparator and reset delays. Therefore, a power-hungry comparator is typically required to make the temperature-dependent comparator delay negligible compared with the RC time constant. To avoid such a trade-off between power and accuracy, the proposed R-RC circuit separates the comparison time, as well as the reset time, from the RC transition period (Fig. 3.4.3, bottom). First, two additional voltages ($V_{R\text{-}RC,PRE1}$ and $V_{R\text{-}RC,PRE2}$) are taken from the R-RC circuits by splitting R_1 into two resistors. Because their purpose is to create V_{COMP1} clock that triggers slightly (several tens of ns) earlier than the crossing point of the $V_{R\text{-}RC1}$ and $V_{R\text{-}RC2}$, R_1 division does not need to be precise. Then, V_{COMP1} is provided to a delay line, and it generates a delayed signal ($V_{COMP1,D}$) to sample $V_{R\text{-}RC1}$ and $V_{R\text{-}RC2}$. If the sampled $V_{R\text{-}RC1}$ is smaller than $V_{R\text{-}RC2}$, the output of the comparator becomes low to increase the delay for the next phase, and vice versa if $V_{R\text{-}RC1}$ is larger than $V_{R\text{-}RC2}$. In the steady-state, the delay is locked so that Φ_1 and Φ_2 make transitions when $V_{R\text{-}RC1}$ and $V_{R\text{-}RC2}$ are equal. It should be noted that the crossing point of $V_{R\text{-}RC1,PRE}$ and $V_{R\text{-}RC2,PRE}$ is always earlier than that of $V_{R\text{-}RC1}$ and $V_{R\text{-}RC2}$, and the gap between those two crossing points is complemented by the delay line, which is adjusted by a bang-bang delay-locked loop. Since Φ_1 and Φ_2 are used to change the configuration of the R-RC core when $V_{R\text{-}RC1}$ and $V_{R\text{-}RC2}$ are equal, the comparator delay can be excluded from the overall period. By using only low-leakage transistors in the R-RC core and by excluding the reset and comparator delay from the oscillation period, the proposed design achieves a stable output frequency across a wide temperature range from -40°C to 125°C.

The proposed R-RC oscillator was fabricated in a 0.18µm CMOS technology with an active area of 0.07mm². In this implementation, we used 1pF for the switching capacitors (C) and 560kΩ, 100kΩ for R_1 and R_2, respectively. R_1 consists of p+poly resistors with and without silicide for the first-order temperature compensation, and R_2 is implemented with an n-well resistor. The proposed oscillator generates a 2.3MHz frequency reference while consuming 7.6µW at the supply voltage of 1.3V and the nominal temperature of 25°C. Figure 3.4.4 (top) depicts the frequency variation in the temperature range from -40°C to 125°C. A total of 11 chips were measured, and 2-point trimming was performed by adjusting only the R_1 on the pull-down side. The average temperature coefficient for 11 chips is 7.93ppm/°C in a temperature range from -40°C to 125°C. The line sensitivity was measured as 0.51%/V while changing the supply voltage from 1.3V to 2.0V (Fig. 3.4.4, bottom). The measured Allan Deviation floor is below 9ppm after 0.5s (Fig. 3.4.5, top). Figure 3.4.5 (bottom) also includes the power and area breakdown. Figure 3.4.6 summarizes the performance of the proposed oscillator compared with that of previously reported state-of-the-art RC oscillators. The proposed R-RC oscillator achieves a wide temperature range from -40°C to 125°C while providing both a superior temperature coefficient and energy efficiency. Figure 3.4.7 shows the die micrograph.

References:

[1] H. Jiang et al., "A 0.14mm² 16MHz CMOS RC Frequency Reference with a 1-Point Trimmed Inaccuracy of ±400ppm from -45°C to 85°C," *ISSCC*, pp. 436-437, Feb. 2021.
[2] W. Choi et al., "A 0.9V 28MHz Dual-RC Frequency Reference with 5pJ/Cycle and ±200ppm Inaccuracy from -40°C to 85°C," *ISSCC*, pp. 434-435, Feb. 2021.
[3] Ç. Gürleyük et al., "A 16MHz CMOS RC Frequency Reference with ±400ppm Inaccuracy from -45°C to 85°C After Digital Linear Temperature Compensation," *ISSCC*, pp. 64-65, Feb. 2020.
[4] A. Khashaba et al., "A 34µW 32MHz RC Oscillator with ±530ppm Inaccuracy from –40°C to 85°C and 80ppm/V Supply Sensitivity Enabled by Pulse-Density Modulated Resistors," *ISSCC*, pp. 66-67, Feb. 2020.
[5] G. Cristiano et al., "An 8.7ppm/°C, 694nW, One-Point Calibrated RC Oscillator Using a Nonlinearity-Aware Dual Phase-Locked Loop and DSM-Controlled Frequency-Locked Loops," *IEEE Symp. VLSI Circuits*, pp. 1-2, June 2020.
[6] A. Savanth et al., "A Sub-nW/kHz Relaxation Oscillator with Ratioed Reference and Sub-Clock Power-Gated Comparator," *IEEE JSSC*, vol. 54, no. 11, pp. 3097-3106, Nov. 2019.
[7] K.-M. Lei et al., "A 0.35V 5,200µm² 2.1MHz Temperature-Resilient Relaxation Oscillator With 667 fJ/Cycle Energy Efficiency Using an Asymmetric Swing-Boosted RC Network and a Dual-Path Comparator," *IEEE JSSC*, vol. 56, no. 9, pp. 2701-2710, Sept. 2021.

2022 IEEE International Solid-State Circuits Conference (ISSCC) | 978-1-6654-2800-2/22/$31.00 ©2022 IEEE | DOI: 10.1109/ISSCC42614.2022.9731730

Authorized licensed use limited to: University of Michigan Library. Downloaded on August 24,2022 at 23:18:04 UTC from IEEE Xplore. Restrictions apply.

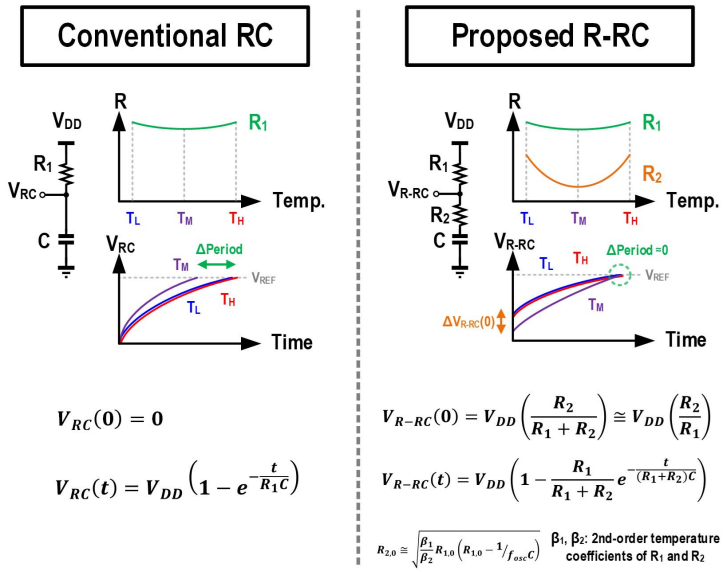

Figure 3.4.1: Concept of a conventional RC configuration (left); the proposed R-RC configuration (right).

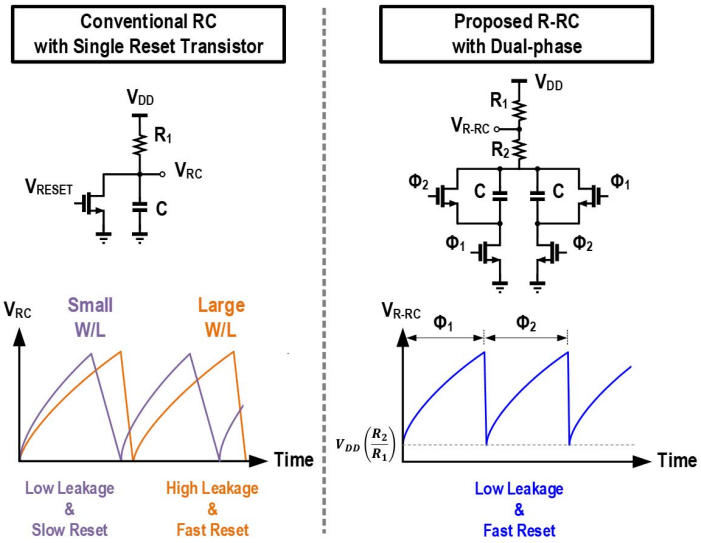

Figure 3.4.2: Conventional reset switching scheme (left); the proposed dual-phase operation (right).

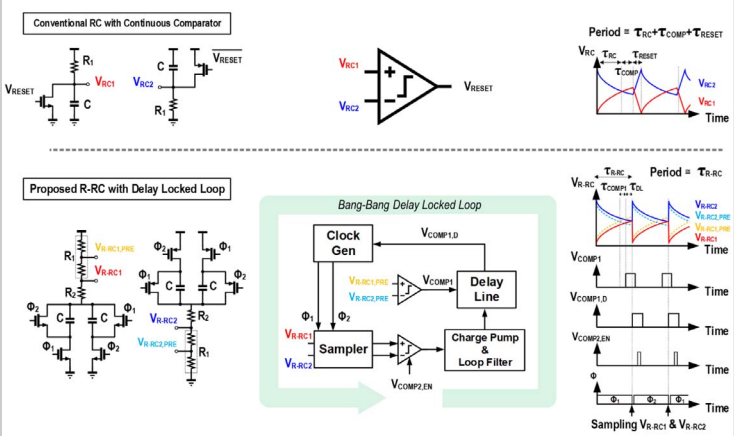

Figure 3.4.3: Simplified circuit diagram and waveform of conventional RC oscillator with continuous comparator (top); the proposed R-RC oscillator with delay-locked loop (bottom).

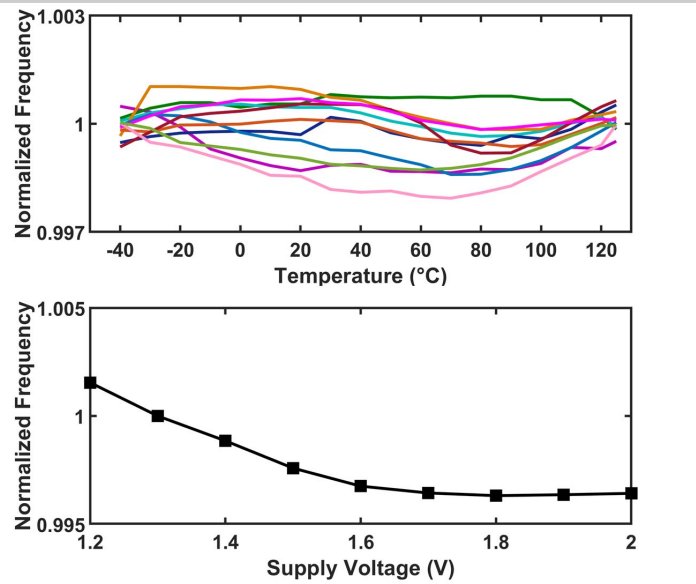

Figure 3.4.4: Measured normalized frequency from 11 samples after a 2-point trim (top); measured line sensitivity (bottom).

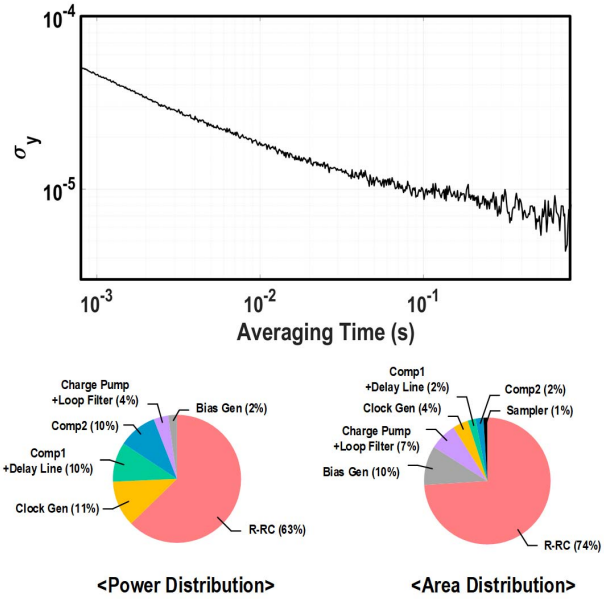

Figure 3.4.5: Measured Allan Deviation (top); power and area breakdown (bottom).

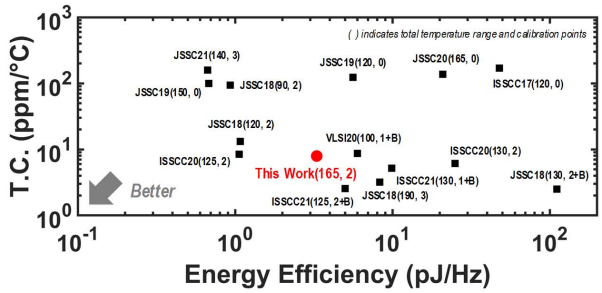

	This Work	ISSCC 2021 [1]	ISSCC 2021 [2]	ISSCC 2020 [3]	ISSCC 2020 [4]	VLSI 2020 [5]	JSSC 2019 [6]	JSSC 2021 [7]
Technology (nm)	**180**	180	65	180	65	180	65	28
Frequency (MHz)	**2.3**	16	28	16	32	0.116	1.2	2.1
Supply Voltage (V)	**1.3~2.0**	1.6~2.0	0.85~1.05	1.6~2.0	1.1~2.3	1.8~2.0	0.9~1.8	0.35~0.38
Power (μW)	**7.6**	158.4	142	400	34	0.694	0.82	1.4
Energy Efficiency (pJ/Hz)	**3.3**	9.875	5	25	1.06	5.98	0.68	0.67
Temperature Coefficient (ppm/°C)	**7.93**	5.2	2.56	6.15	8.4	8.7	100	158
Temperature Range (°C)	**-40~125**	-45~85	-40~85	-45~85	-40~85	-15~85	-25~125	-20~120
Temperature Dependence Compensation Method	**R-RC**	Polynomial Correction			Switched Resistor		No	
Calibration points	**2**	1+batch	2+batch	2	2	1+batch	0	3
Line Sensitivity (%/V)	**0.51**	0.2	0.29	0.12	0.008	0.38	0.7	83.3
Area (mm²)	**0.07**	0.14	0.06	0.3	0.18	1.2	0.005	0.0052
# of Samples	**11**	18	12	20	6	10	7	7
Allan Deviation (ppm)	**9**	0.35	2	0.32	2.5	4	10	210

Figure 3.4.6: Performance summary and comparison table.

Authorized licensed use limited to: University of Michigan Library. Downloaded on August 24,2022 at 23:18:04 UTC from IEEE Xplore. Restrictions apply.

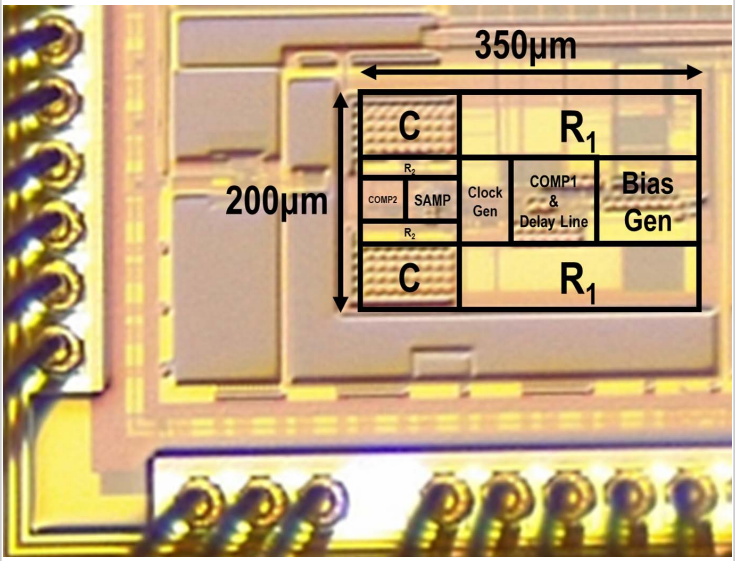

Figure 3.4.7: Die micrograph.

Authorized licensed use limited to: University of Michigan Library. Downloaded on August 24,2022 at 23:18:04 UTC from IEEE Xplore. Restrictions apply.